"ALL-STAINLESS" SANITARY PRESSURE GAUGES, TYPE PBQ

TYPE PBQ, with sanitary chemical seal

STANDARD MODEL

CASE	: bayonet lock, AISI304/1.4301, IP-65 standard with blow-out device
WETTED PARTS	: flush diaphragm, AISI316L/1.4435
WINDOW	: mineral glass 4 mm
DIAL	: aluminium, black figures on white
POINTER	: aluminium, black
MOVEMENT	: stainless steel AISI304/1.4301

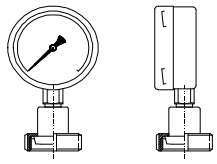

PBQ100XA-01

RANGE	: from -1/0 upto 0-40 bar, acc. to EN-837-1 (see page 55)
ACCURACY	: case Ø 63 and Ø 80 mm: ±1.6% F.S./class 1.6 case Ø 100 and Ø 160 mm: ±1.0% F.S. /class 1.0
Tprocess	: -20°/+120°Celcius (-40°C upto 250°C on demand)
OPTIONS	: see page 57-58, electrical contact or transmitter: 4-20 mA, 0-20mA, 0-10Vdc: see page 59-65

TYPE	NORM	SEAL MODEL	DN	MINIMUM PN	CASE DIAMETER xxx (mm) 063	100	160
PBQxxxXA-01	DIN 11 851	GLAND PIECE + COUPLING NUT	1" DN25	6 bar			
PBQxxxXA-02			1½" DN40	1 bar			
PBQxxxXA-03			2" DN50	1 bar			
PBQxxxXA-04		THREAD PIECE	1½" DN40	1 bar			
PBQxxxXA-05			2" DN50	1 bar			
PBQxxxXA-010	DIN 11 864-1	GLAND PIECE + COUPLING NUT	DN25	16 bar			N.A.
PBQxxxXA-020			DN40	1 bar			
PBQxxxXA-030			DN50	1 bar			
PBQxxxXA-040		THREAD PIECE	DN40	1 bar			
PBQxxxXA-050	For tubes DIN 11 866 series A		DN50	1 bar			
PBQxxxXA-06	SMS	GLAND PIECE + COUPLING NUT	1½"	1 bar			
PBQxxxXA-07			2"	1 bar			
PBQxxxXA-08		THREAD PIECE	1½"	1 bar			
PBQxxxXA-09			2"	1 bar			
PBQxxxXA-10	APV - RJT	GLAND PIECE + COUPLING NUT	1½"	1 bar			
PBQxxxXA-11			2"	1 bar			
PBQxxxXA-12		THREAD PIECE	1½"	1 bar			
PBQxxxXA-13			2"	1 bar			
PBQxxxXA-14	ISO 2853 (IDF)	GLAND PIECE + COUPLING NUT	1½"	1 bar			
PBQxxxXA-15			2"	1 bar			
PBQxxxXA-16		THREAD PIECE	1½"	1 bar			
PBQxxxXA-17			2"	1 bar			
PBQxxxXA-18	ISO 2852	TRI-CLAMP	1" - DN25	16 bar			N.A.
			1½" - DN38	1 bar			
PBQxxxXA-19	TRI-CLAMP, for tubes ISO 2037 and BS 4825 Part 1		2" - DN51	1 bar			
PBQxxxXA-181	DIN 32 676 serie A	TRI-CLAMP	DN25	6 bar			N.A.
PBQxxxXA-182			DN40	1 bar			
PBQxxxXA-183	TRI-CLAMP, for tubes DIN 11 850		DN50	1 bar			
PBQxxxXA-191	BS 4825	TRI-CLAMP	NPS ¾"	25 bar			N.A.
PBQxxxXA-192			NPS 1"	16 bar			N.A.
PBQxxxXA-193	TRI-CLAMP, for tubes ASME BPE, ISO 1127, BS 4825 Part 3		NPS 1 ½"	1 bar			
PBQxxxXA-20	VARIVENT		DN50	1 bar			
PBQxxxXA-21	TUCHENHAGEN VARIVENT		DN68	1 bar			
OPTIONS							
OFF-CENTRE BACK CONNECTION			e.g. PBQ100XC-01				
GLYCERINE		GLYCERINE FILLED CASE e.g. PBQ100LA-31 (L = Liquid) (In combination with electrical device see page 64: Ondina oil)					

» Other ranges, pressure ratings, flange sizes, materials and connections on demand

» Other Standards also available: e.g. Südmo, Naue, Guth, Neumo

"ALL STAINLESS" SANITARY PRESSURE GAUGE, TYPE PBQ

TYPE	DRAWING	DIMENSIONS mm

01 02 03

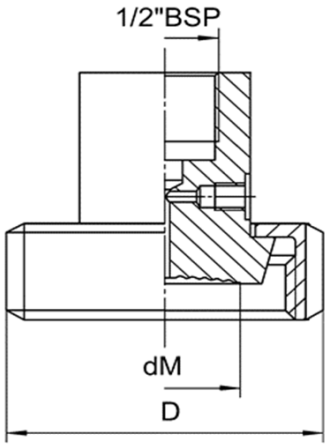

DIN 11 851

GLAND PIECE + COUPLING NUT

DN	PN bar	D	dM	For tube Male ø	Tube Female ø
25	40	63	26	29 x 1,5	26
32		70	32	35 x 1,5	32
40		78	38	41 x 1,5	38
50	25	92	48	53 x 1,5	50
65		112	60	70 x 2	66
80		127	72	85 x 2	81

04 05

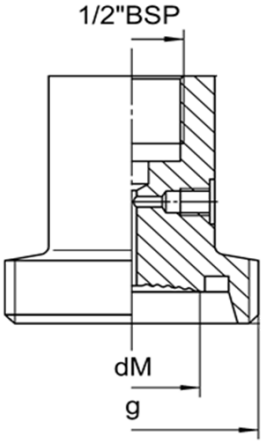

DIN 11 851

THREAD PIECE

DN	PN bar	dM	g	For tube Male ø	Tube Female ø
25	40	26	Rd 52 x 1/6	29 x 1,5	26
32		32	Rd 58 x 1/6	35 x 1,5	32
40		38	Rd 65 x 1/6	41 x 1,5	38
50		48	Rd 78 x 1/6	53 x 1,5	50
65		60	Rd 95 x 1/6	70 x 2	66

010 020 030

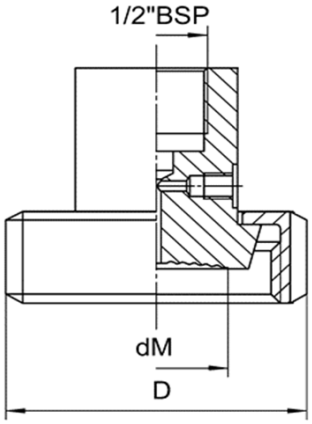

DIN 11 864-1

GLAND PIECE + COUPLING NUT

DN	PN bar	D	dM	For tube Male ø	Tube Female ø
25	40	63	21	29 x 1,5	26
32		70	28	35 x 1,5	32
40		78	34	41 x 1,5	38
50	25	92	46	53 x 1,5	50
65		112	60	70x 2	66
80		127	72	85 x 2	81

040 050

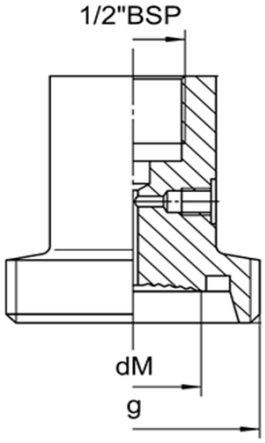

DIN 11 864-1

THREAD PIECE

DN	PN bar	dM	g	For tube Male ø	Tube Female ø
25	40	21	Rd 52 x 1/6	29 x 1,5	26
32		28	Rd 58 x 1/6	35 x 1,5	32
40		34	Rd 65 x 1/6	41 x 1,5	38
50	25	46	Rd 78 x 1/6	53 x 1,5	50

"ALL STAINLESS" SANITARY PRESSURE GAUGE, TYPE PBQ

TYPE	DRAWING	DIMENSIONS mm

06 / 07

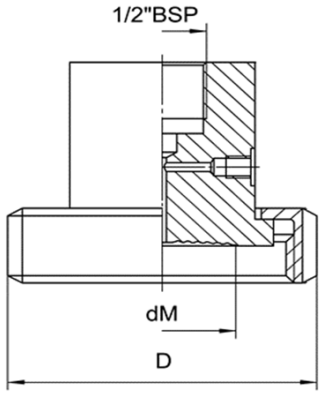

SMS

GLAND PIECE + COUPLING NUT

NPS	PN bar	dM	D	For tube Male ø	Tube Female ø
1"	40	19	51	25 x 1,2	22,6
1 ½"		32	74	38 x 1,2	35,6
2"		46	84	51 x 1,2	48,6
2 ½"	25	56	100	63,5 x 1,6	60,3
3"		66	114	76,4 x 1,6	72,9

08 / 09

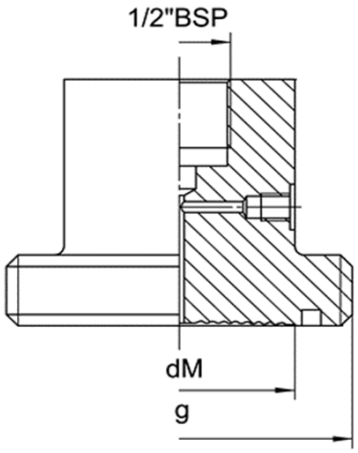

SMS

THREAD PIECE

NPS	PN bar	dM	g	For tube Male ø	Tube Female ø
1 ½"	40	32	Rd 60-6	38 x 1,2	35,6
2"		46	Rd 70-6	51 x 1,2	48,6

10 / 11

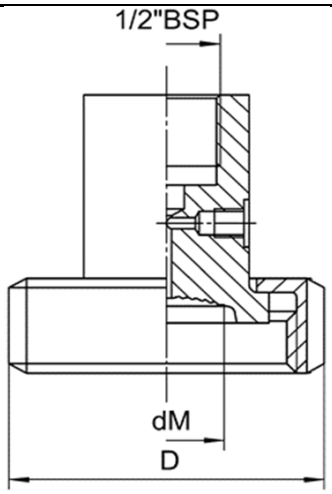

APV - RJT

GLAND PIECE + COUPLING NUT

NPS	PN bar	dM	SW (D)	For tube Male ø	Tube Female ø
1"	40	19	51	25,4 x 1,6	22,2
1 ½"		32	65	38,1 x 1,6	34,9
2"		38	79	50,8 x 1,6	47,6

12 / 13

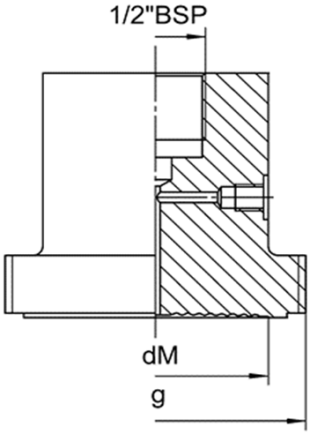

APV - RJT

THREAD PIECE

NPS	PN bar	dM	g	For tube Male ø	Tube Female ø
1 ½"	40	32	2 5/16x1/8"	38,1 x 1,6	34,9
2"		38	2 7/8x1/16"	50,8 x 1,6	47,6

"ALL STAINLESS" SANITARY PRESSURE GAUGE, TYPE PBQ

TYPE	DRAWING	DIMENSIONS mm

14 / 15

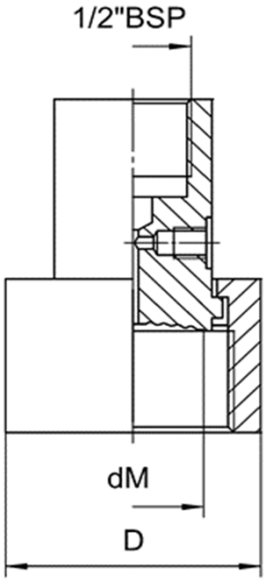

ISO 2853 (IDF)

GLAND PIECE + COUPLING NUT

NPS	PN bar	dM	D	For tube Male ø	Tube Female ø
1"	40	19	52	25,6 x 1,5	22,6
1 ½"		32	64	38,6 x 1,5	35,6
2"		46	79	51,6 x 1,5	48,6

16 / 17

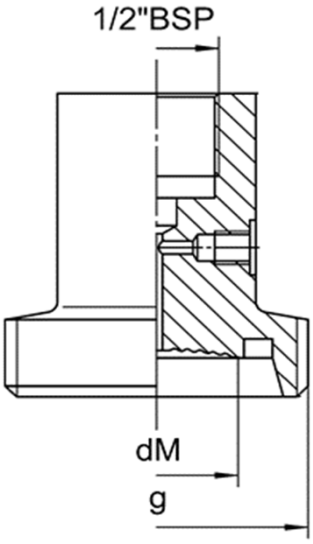

ISO 2853 (IDF)

THREAD PIECE

NPS	PN bar	dM	g	For tube Male ø	Tube Female ø
1 ½"	40	34	1 1/2"IDF	38,6 x 1,5	35,6
2"		45	2"IDF	51,6 x 1,5	48,6

"ALL STAINLESS" SANITARY PRESSURE GAUGE, TYPE PBQ

TYPE	DRAWING	DIMENSIONS mm

18 / 19

ISO 2852

Tri - Clamp

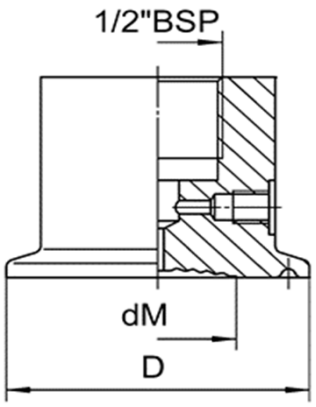

For pipes per ISO 2037 and BS 4825 Part 1

DN	PN bar	D	dM	For tube Male ø	Tube Female ø
DN25 - 1"	40	50.5	21	25 x 1,2	22,6
DN38 - 1 ½"			32	38 x 1,2	35,6
DN51 - 2"		64	46	51 x 1,2	48,6
DN63,5 - 2 ½"	25	77.5	56	63,5 x 1,6	60,3
DN76,1 - 3"		91	66	76,1 x 1,6	72,9

181 / 182 / 183

DIN 32 676

Tri - Clamp

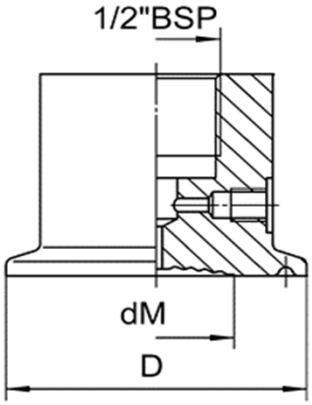

For pipes per DIN 11 850

NPS	PN bar	D	dM	For tube Male ø	Tube Female ø
DN 25	40	50,5	24	29 x 1,5	26
DN 32			28	35 x 1,5	32
DN 40			32	41 x 1,5	38
DN 50		64	46	53 x 1,5	50
DN 65	25	91	60	70 x 2	66

191 / 192 / 193

BS 4825

Tri - Clamp

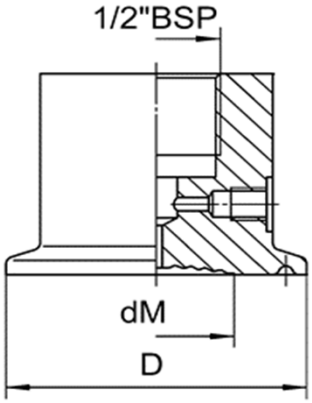

For pipes per BS 4825 part 3 or ASME BPE

ASME BPE	BS4825 - ISO 1127	For tubes according to:			ASME BPE		ISO 1127	
NPS	DN	PN bar	D	dM	Tube Male ø	Tube Female ø	Tube Male ø	Tube Female ø
3/4"	20	40	25,4	16	**19,05 x 1,2**	16,65	**26,9 x 1,6**	23,7
1"	25		50,5	21	**25,4 x 1,6**	22,2	**33,7 x 2**	29,7
1 ½"	38			30	**38,1 x 1,6**	34,8	**42,4 x 2**	38,4
2"	51		64	38	**50,8 x 1,6**	47,5	**48,3 x 2**	44,3
2 ½"	63,5	25	77,5	52	**63,5 x 1,6**	60,3	**60,3 x 2**	56,3

20 / 21

VARIVENT

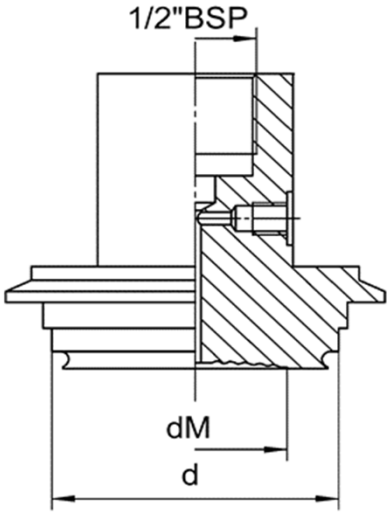

DN (d)	PN bar	suitable for In Line housing	dM
50	25	DN25	30
68	16	DN40 and up	46

SANITARY SEALS

TYPE	DRAWING	DIMENSIONS mm

22
23
24

DIN 11851

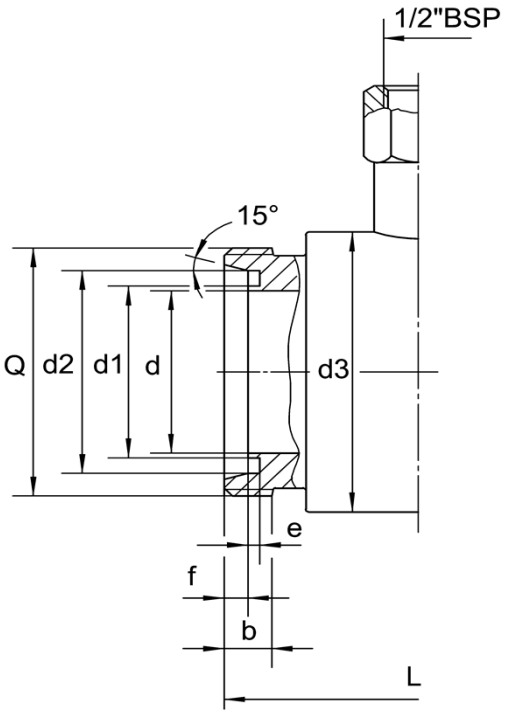

IN-LINE SEAL

DN	PN bar	b	Q	d	d1	d2	d3	e	f	L
20	40	14	Rd 44x1/6	19.8	23	32.8	53	3	6	138
25			Rd 52x1/6	26.2	30	39.8	58	3.5	7	140
32			Rd 58x1/6	31.8	36	45.8	68			
40			Rd 65x1/6	38	42	51.8	78			
50			Rd 78x1/6	50.7	54	63.8	88			114
65		16	Rd 95x1/6	65.7	71	80.8	100		8	116
80		20	Rd 110x1/4	79.7	85	94.8	116			
100			Rd 130x1/4	99.7	104	113.8	138	4	10	120

25
26
27

APV-ISS

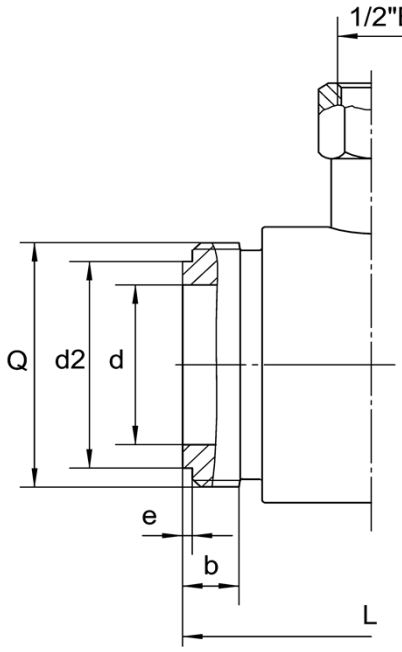

IN-LINE SEAL

DN	PN psi	b	Q	d	d1	d2	d3	e	f	L
1"	600	17	1 15/32	22.5	—	29	—	2.6	—	126
1 ½"			1 63/64	35.5	—	43	—	2.6	—	
2"			2 17/32	48.6	—	56	—	2.6	—	100

SANITARY SEALS

TYPE	DRAWING	DIMENSIONS mm

28 / 29 / 30

SMS

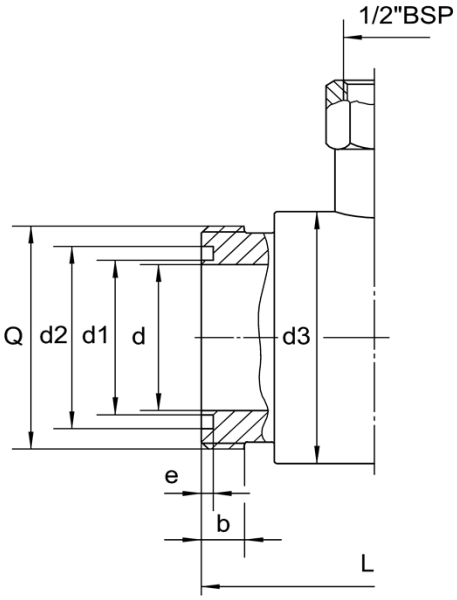

DN	PN bar	b	Q	d	d1	d2	d3	e	L
1"	40	11	Rd 40x1/6	22.5	25	32	48	3	126
1 ½"		15	Rd 60x1/6	35.5	38	48	68		
2"			Rd 70x1/6	48.6	51	61	78		100

IN-LINE SEAL

31 / 32 / 33

TRI-CLAMP

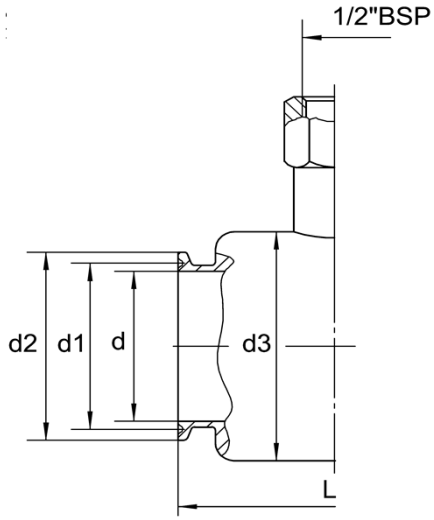

DN	PN bar	d	d1	d2	d3	L
1"	40	22.5	43.5	50.5	54	126
1 ½"		35.5				
2"		48.6	56.5	64	78	100
2 ½"		59.7	70.6	77.4	92	
3"		65.7	83.5	91	98	
4"		99.7	110	119	133	

IN-LINE SEAL

STANDARD PRESSURE RANGES FOR TYPES:

PBX, PBX-TG, PBX-SF, PBB, PMX, PPB, PBS, PFS, PBQ, PFQ, PBR, PBT, RPX, RPP, PBX-SS, DIFFERENTIAL PRESSURE GAUGES

PRESSURE RANGES				EXTRA COSTS										
(in bar)*****	SCALE DIVISION			CASE DIMENSIONS (in mm)										
		OPTION												
	cl. 1.0 cl. 1.6	cl. 0.6 cl. 0.5	only PBX-TG cl. 0.3 cl. 0.25	Ø 63	Ø 80	Ø 100	Ø 160	Ø 250	72x72	96x96	144x144	192x192 280x280 380x380 400x300 500x400	72x144 144x72	192x96 96x192
-1 ...0	0.02	0.005	0.005						•					
-1 ...0.6	0.05	0.01	0.005						•					
-1 ...1.5	0.05	0.02	0.01						•					
-1 ...3	0.1	0.02	0.01						•					
-1 ...5	0.1	0.05	0.02						•					
-1 ...9	0.2	0.05	0.05						•					
-1 ...15	0.5	0.1	0.05						•					
-1 ...24	0.5	0.2	0.1						•					
0 ...0.6	0.01	×	×						•					
0 ...1	0.02	0.005	0.005						•					
0 ...1.6	0.05	0.01	0.005						•					
0 ...2.5	0.05	0.02	0.01						•					
0 ...4	0.1	0.02	0.01						•					
0 ...6	0.1	0.05	0.02						•					
0 ...10	0.2	0.05	0.05						•					
0 ...16	0.5	0.1	0.05						•					
0 ...25	0.5	0.2	0.1						•					
0 ...40	1	0.2	0.1						•					
0 ...60	1	0.5	0.2						•					
0 ...100	2	0.5	0.5											
0 ...160	5	1	0.5											
0 ...250 CE	5	2	1											
0 ...400 CE	10	2	1											
0 ...600 CE	10	5	2											
0 ...1000 CE	20	5	5											
0 ...1600 CE	50	×	×	×	×				×				×	×
0 ...2000 CE	50	×	×	×	×			×	×	×	×	×	×	×
0 ...2500* CE	50	×	×	×	×			×	×	×	×	×	×	×
0 ...3000* CE	50	×	×	×	×			×	×	×	×	×	×	×
0 ...4000*** CE	50	×	×	×	×		See p14	×	×	×	×	×	×	×
0 ...5000***, 0 ... 6000*** and 0 ...7000*** - see page 14 CE														
NON STANDARD RANGES														
e.g. 0-7 bar or 0-110 psi														
DOUBLE SCALES														
e.g. bar/psi, bar/kPa, etc.														
FREON SCALES e.g. R12, R134A, R22, R404A, R407C, R502, R504, R717, NH3														
ACCURACY														
±1.6% F.S. (class 1.6)				•	•	×	×	×	•	•	×	×	×	×
±1.0% F.S. (class 1.0)						•	•	•			•	•	•	•
±0.6 / 0.5 %F.S. (class 0.6 or 0.5)***				×	×				×	×				
±0.3 / 0.25 %F.S. (class 0.3 or 0.25) ****				×	×	×	****	****	×	×	×	×	×	×
Mirrorscale (standard for PBX-TG, page 12)				×	×	×			×	×	×	×	×	×
TRM scales														
0 ...100 % lin.														
0 ...10 square root														
0.2 ...1 bar														
3 ...15 psi														
20 ...100 kPa														

× NOT AVAILABLE
• STANDARD

* ELEMENT CrMo52 i.o. AISI316Ti/1.4571
** ELEMENT NiSpan C i.o. AISI316Ti/1.4571
***** Scale in Psi, kPa, kg/cm², mWC etc. available with no extra charge

*** ONLY FOR TYPE PBX OR PBX-SF
****ONLY FOR TYPE PBX-TG - see page 12

OPTIONS ON PRESSURE GAUGES

TYPE	CASE DIMENSIONS (in mm)	EXTRA COSTS								
		CONNECTIONS							CASE & BEZEL	
		1/8"BSP/NPT max. 400 bar	1/4"BSP/NPT max. 1000 bar	1/2"BSP max. 2500 bar***, 1/2"NPT max. 1000 bar	3/8"BSP/NPT max. 1000 bar	M20x1.5 max. 1600 bar	M16x1.5 H.P. female max. 7000 bar**	9/16"UNFx18 H.P. female max. 7000 bar**	AISI316L / 1.4404	BACK / FRONT FLANGE AISI316L/1.4404
PBX	063		•							×
	080		•						×	×
	100			•						
	160			•					*	*
	250			•					×	×
PBX-SF	063		•						O	×
	100			•					O	
	160			•					O	
PBB	100			•					×	×
	160			•					×	×
PCX	100			•			×	×		
	160			•			×	×		
	250			•			×	×	×	×
PMX	100			•			×	×		×
	160			•			×	×		×
PPB - PPC	square		•				×	×	×	×
	rectangular		•				×	×	×	×
PBS - PBQ PFS - PFQ	063	ON DEMAND: SEE ALSO PAGE 23-41								
	080								×	×
	100									
	160									
PBR - PBT	100	SEE PAGE 42-43								×
	160									×
PCD	100			•			×	×		
	160			•			×	×		
PBD	100			•			×	×	×	×
	160			•			×	×	×	×
PMD	100			•			×	×		
	160			•			×	×	×	×
POD	100						×	×		×
	160						×	×	*	×
RPX	ALL			•					×	×
PBX-SS	063		•						•	•
	100			•					•	•
	160			•					•	•

× NOT AVAILABLE • STANDARD O ON DEMAND

* Not possible in combinations with contacts or transmitters
** Not available with pulsation damper
*** As per DIN16001

OPTIONS ON PRESSURE GAUGES

TYPE	CASE DIMENSIONS (in mm)	EXTRA COSTS													
		WINDOW MATERIAL			BLOW- OUT		POINTERS					MEASURING SYSTEM			
		PMMA - PLEXIGLASS	SECURIT	LAMINATED SAFETY GLASS	DISC	PLUG * (LIQUID FILLED)	ADJUSTABLE	INDEX POINTER ON GLASS	DRAG POINTER		DRAG POINTER in combination with HZ contact	OIL & GREASE FREE**	MONEL WETTED PARTS	PULSATION DAMPER AISI316 1.4401	OVERLOAD 2x F.S. other on demand
									Single	Double		MAX 400 bar			
PBX	063				●	●				×	×				
	080				●	●				×	×				
	100				●	●									
	160				●	●									
	250				●	●					×		×		
PBX-SF	063	×	×	●	×	×				×	×				
	100	×	×	●	×	×				×					
	160	×	×	●	×	×				×					
PBB	100				●	●	×			×					
	160				●	●	×			×					
PCX	100				●	●			O	×	×	×	×		see page 16
	160				●	●			O	×	×	×	×		
	250				●	●			×	×	×	×	×		
PMX	100				●	●				×			×	×	see page 17-18
	160				●	●				×			×	×	
PPB	square	●	×	×	×	×				×			×		O
PPC	rectangular	●	×	×	×	×	×	×	×	×	×		×		O
PBS	063		×		●	●				×	×		O		O
PBQ	080		×	×	●	●				×	×		O		O
PFS	100				●	●				×			O		O
PFQ	160				●	●				×			O		O
PBR	100				●	●				×			O		O
PBT	160				●	●				×			O		O
PCD	100	×		×	×	×		×	×	×	×	×	×		see page 46
	160	×		×	×	×		×	×	×	×	×	×		
PBD	100				●	●				×		×			×
	160				●	●				×		×			×
PDD	100				●	●				×		×	×		×
PMD	160				●	●				×		×	×		×
POD	100				●	●				×	×	×	×		×
	160				●	●				×	×	×	×		×
RPX	ALL	●	see page 21, 22	×	×	×	●	×	×	×	×		×		×
RPP		●		×	×	×	●	×	×	×	×		×		×
PBX-SS	063	×	●	×	×	×		×	×	×	×				
	100	×	●	×	×	×		×	×	×	×				
	160	×	●	×	×	×		×	×	×	×				

× NOT AVAILABLE ● STANDARD O ON DEMAND

* WITH COMPENSATING DIAPHRAGM

** Only PBX-SFxxxXX is suitable for use on oxygen!!