"ALL-STAINLESS" DIAPHRAGM SEAL PRESSURE GAUGES, TYPE PBS

TYPE PBS, with chemical seal

STANDARD MODEL

CASE	: bayonet lock, AISI304/1.4301, IP-65 standard with blow-out device
WETTED PARTS	: AISI316L/1.4435, other on demand
WINDOW	: mineral glass 4 mm
DIAL	: aluminium, black figures on white
POINTER	: aluminium, black
MOVEMENT	: stainless steel AISI304/1.4301

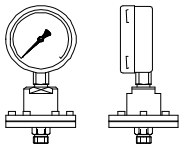

PBS100XA-06

RANGE	: -1/0 upto 0-60 bar acc. to EN 837-1 (see page 55) high pressure ranges (max. 600 bar): see page 55
ACCURACY	: case Ø 63 and Ø 80 mm: ±1.6% F.S./class 1.6 case Ø 100 and Ø 160 mm: ±1.0% F.S. /class 1.0
Tprocess	: -20/+120 ℃ (-40℃ upto +200℃ on demand)
OPTIONS	: see page 57-58, electrical contact or transmitter 4-20 mA, 0-20mA, 0-10Vdc: see page 59-65

TYPE	SEAL MODEL	DN	MINIMUM PN	MAXIMUM PN	CASE DIAMETER xxx (Ø in mm) 063	100	160
PBSxxxXA-01	***FLUSH DIAPHRAGM***	½"BSP	25 bar	600 bar			N.A.
		½"NPT	25 bar	600 bar			N.A.
PBSxxxXA-02		¾"BSP	16 bar	600 bar			N.A.
		¾"NPT	25 bar	600 bar			N.A.
PBSxxxXA-03		1"BSP	4 bar (6 bar ø160)	600 bar			
		1"NPT	6 bar (10 bar ø160)	600 bar			
PBSxxxXA-04	***FLUSH DIAPHRAGM***	1"BSP female	6 bar	600 bar			
PBSxxxXA-05		1¼"BSP female	6 bar	600 bar			
PBSxxxXA-06	**INTERNAL DIAPHRAGM**	½"BSP	1,6 bar	250 bar			
PBSxxxXA-07		½"NPT	1,6 bar	250 bar			
PBSxxxXA-09	***INTERNAL DIAPHRAGM***	½"BSP/NPT	1 bar	40 bar			
PBSxxxXA-10		½"BSP/NPT	100 bar	250 bar			
PBSxxxXA-11	***INTERNAL DIAPHRAGM***	½"BSP/NPT female	1 bar	100 bar	O D	O D	O D
PBSxxxXA-12		½"BSP/NPT female	100 bar	250 bar	O D	O D	O D
PBSxxxXA-13	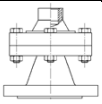 ***I-TYPE***	3/4-1"ANSI or DN20-25	1 bar	150# or PN40	O D	O D	O D
PBSxxxXA-14		1½"ANSI or DN40	1 bar	150# or PN40	O D	O D	O D
PBSxxxXA-15		2"ANSI or DN50	1 bar	150# or PN40	O D	O D	O D
PBSxxxXA-16	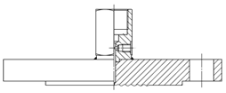 ***FLUSH DIAPHRAGM***	DN25	4 bar (6 bar ø160)	PN40			
		1"ANSI	4 bar (6 bar ø160)	150#			
PBSxxxXA-17		DN40	1 bar	PN40			
		1½"ANSI	1 bar	150#			
PBSxxxXA-18		DN50	1 bar	PN40			
		2"ANSI	1 bar	150#			
PBSxxxXA-19	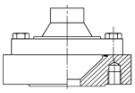 ***OPEN FLANGE***	DN15-20	1 bar	PN40			
		1/2"ANSI		150#			
PBSxxxXA-20		DN25		PN40			
		1"ANSI		150#			
PBSxxxXA-21		DN50		PN40			
		2"ANSI		150#			
PBSxxxXA-22	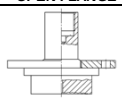 ***PAPER-SEAL***	DN 48 tube 6,5mm	1,6 bar	40 bar			
PBSxxxXA-23		DN 48 tube 15mm					
PBSxxxXA-24	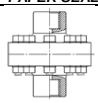 ***PVC-SEAL***	¼"BSP/NPT female	2,5 bar	10 bar			
PBSxxxXA-25		½"BSP/NPT female					
PBSxxxXA-26	**MINI-SEAL**	½"BSP/NPT	1 bar	160 bar			

» Other ranges, pressure ratings, flange sizes, materials and connections on demand

"ALL-STAINLESS" DIAPHRAGM SEAL PRESSURE GAUGES, TYPE PBS

		CASE DIAMETER xxx (Ø in mm)		
	OPTIONS	**063**	**100**	**160**
		EXTRA COSTS		
PTFE Foil *	***PTFE FOIL ON DIAPHRAGM (types: 09-10-11-12-13-14-15-19-20-21)***			
PTFE wetted parts*	***PTFE FOIL ON DIAPHRAGM PTFE LINING ON WETTED PARTS (types: 09-10-11-12-13-14-15-19-20-21)***	O.D	O.D.	O.D.
OFF-CENTRE BACK CONNECTION	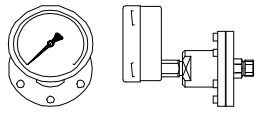 ***e.g. PBS100XC-06***			
COOLING ELEMENT	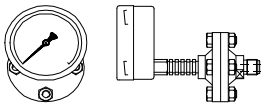 ***FOR PROCESS TEMPERATURES UP TO +200°C***			
ONDINA OIL	***(In combination with electrical device)***	N.A.		
GLYCERINE	***GLYCERINE FILLED CASE e.g. PBS100LA-01 (L = Liquid)***			
Options wetted parts	**for PBS tpe 16, 17, 18 seal with flush diaphragm**	**1 " ANSI / DN 25**	**1 1/2 " ANSI / DN 40**	**2 " ANSI / DN 50**
	REMARKS	**EXTRA COSTS**		
Duplex / 1.4462		O.D.	O.D.	O.D.
PTFE Foil*	temperature <= 250 °C.			
Hastelloy C276 / 2.4819				
Hastelloy C4 / 2.4610		O.D.	O.D.	O.D.
Monel / 2.4360				
Tantalum	temperature <= 250 °C.			
Titanium / 3.7035	temperature <= 250 °C.			
Uranus B6 / 1.4539		O.D.	O.D.	O.D.
Other materials		O.D.	O.D.	O.D.

"ALL STAINLESS" DIAPHRAGM SEAL PRESSURE GAUGE, TYPE PBS

TYPE	DRAWING	DIMENSIONS mm

01 02

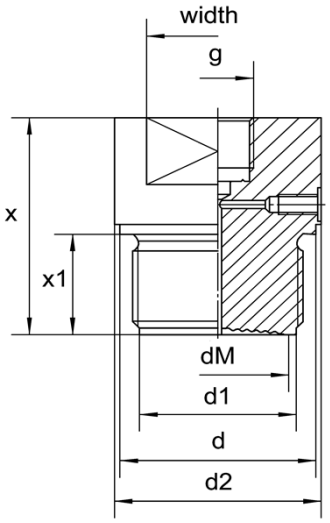

Flush Diaphragm

DN	PN bar	d	d1	d2	dM	g	x	x1	width
½"BSP	600	—	18	—	16	¼"BSP	55	20	27
¾"BSP		32	22		20	½"BSP	56		32
1"BSP		39	29		28		55	21	41
1½"BSP		55	44	58	38		65	30	50
2"BSP		68	56	78	46		70		65

03

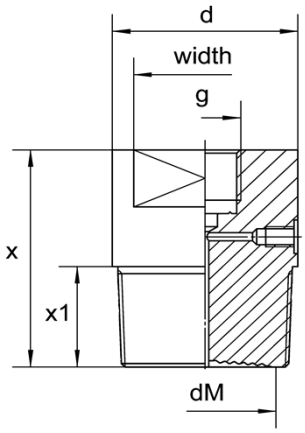

Flush Diaphragm

DN	PN bar	d	dM	g	x	x1	width
½"NPT	600	—	16	¼"BSP	54	19	27
¾"NPT					60	25	
1"NPT			24	½"BSP	65	28	41
1½"NPT		52	32			30	46
2"NPT		78	38			30	65

04 05

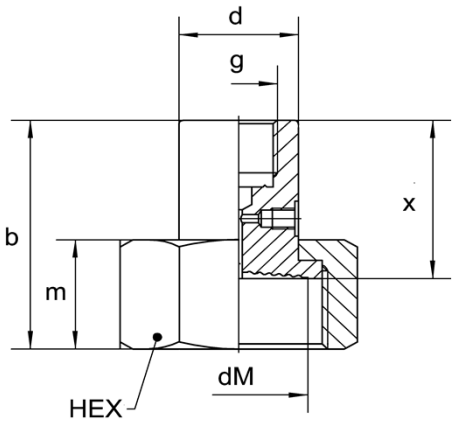

Flush Diaphragm with female thread

DN	PN bar	b	d	m	dM	g	x	x1	HEX
1"BSP	600	49,5	23,5	28,5	24	¼"BSP	30	—	41
1¼"BSP		65	30	30,5	28	½"BSP	30		50
1½"BSP	40		32	31	34				55
2"BSP		72,5	40	35	46		50		70

"ALL STAINLESS" DIAPHRAGM SEAL PRESSURE GAUGES, TYPE PBS

TYPE	DRAWING	DIMENSIONS mm

06 07 08

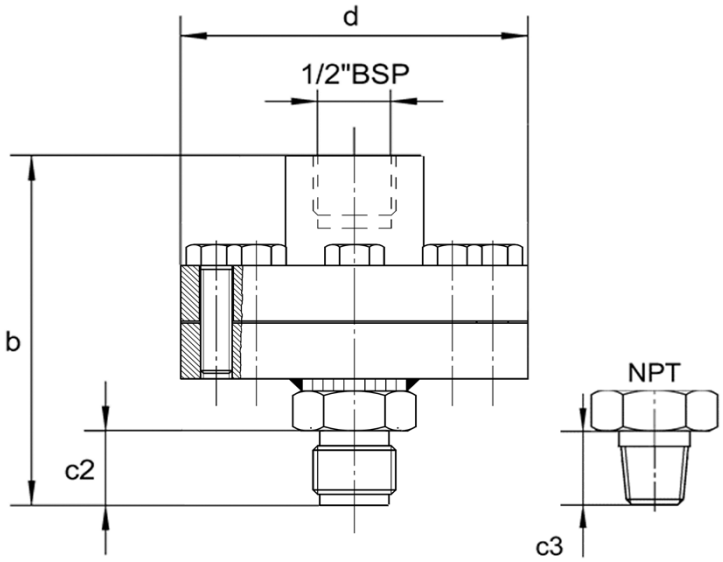

Internal Diaphragm

DN	PN bar	b	c2	c3	d	width
½"BSP	250	100	20		88	SW 27
½"NPT				20		SW 27

09 10

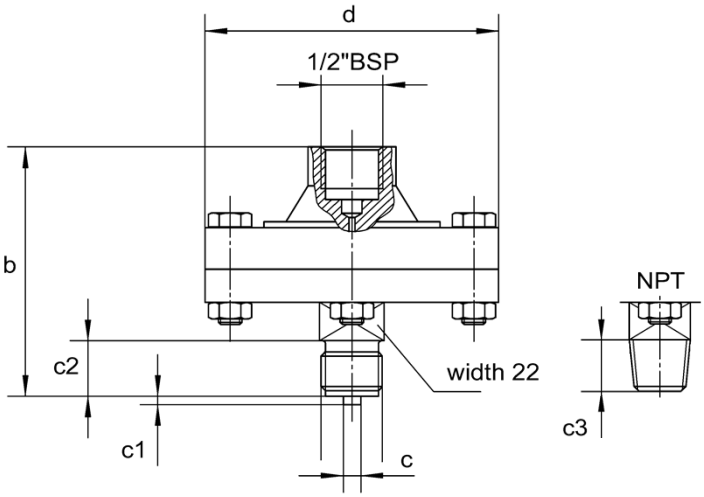

Internal Diaphragm

DN	PN bar	b	c	c1	c2	c3	d
½ BSP/NPT	100	90	6	3	20	19	99
½ BSP/NPT	250	97	6	3	20	19	118

11 12

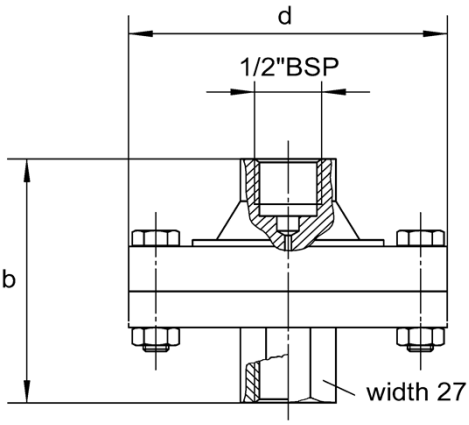

Internal Diaphragm with female thread connection

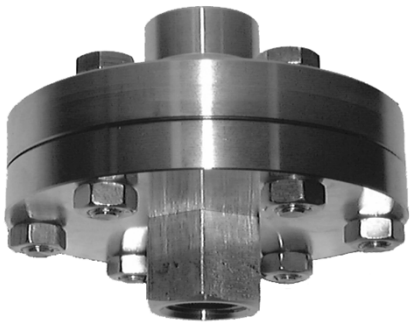

DN	PN bar	b	d	
½ BSP/NPT	100	79	99	
½ BSP/NPT	250	89	118	

» Other body and diaphragm materials: Hastelloy, Tantalum, Nickel, Titanium, Monel, Inconel etc., on demand.

"ALL STAINLESS" DIAPHRAGM SEAL PRESSURE GAUGES, TYPE PBS

TYPE	DRAWING	DIMENSIONS mm

13

14

15

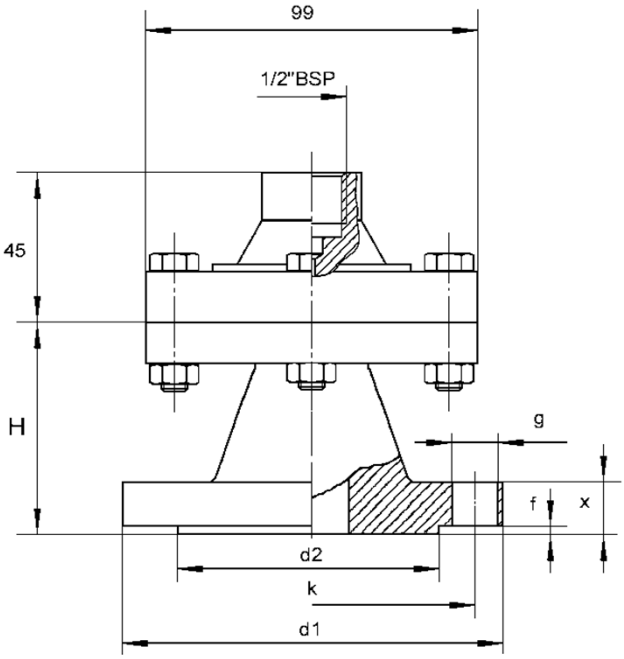

I-Type

DN	PN bar	H ~	d1	d2	f	g	k	x
DN 25	40	51	115	68	3	4xø14	85	18
DN 50	40	59	165	102	3	4xø18	125	20
DN 50	64	73	180	102	3	4xø22	135	26
DN 50	100	80	195	102	3.5	4xø26	145	28
DN 50	160	85	195	102	3	4xø26	145	30
DN 50	250	93	200	102	3	8xø26	150	38
DN 50	320	100	210	102	3	8xø26	160	42
DN 50	400	110	235	102	3	8xø30	180	52
DN	**Class**	**H ~**	**d1**	**d2**	**f**	**g**	**k**	**x**
¾"ANSI	150	63	98.6	42.9	1.6	4xø16	69.9	12.7
¾"ANSI	300	68	117.3	42.9	1.6	4xø19	82.6	15.8
1" ANSI	150	66	108	50.8	1.6	4xø16	79.2	14.2
1"ANSI	300	72	123.9	50.8	1.6	4xø19	88.92	17.5
1½ ANSI	150	72	127	73.2	1.6	4xø16	98.6	17.5
1½ ANSI	300	79	155.4	73.2	1.6	4xø22	114.3	20.6
1½ ANSI	600	87	155.4	73.2	6.4	4xø22	114.3	28.8
2"ANSI	150	74	152.4	91.9	1.6	4xø19	120.7	19.8
2"ANSI	300	80	165.1	91.9	6.4	8xø19	127	22.5
2"ANSI	600	90	165.1	91.9	6.4	8xø19	127	31.8
2"ANSI	900	108	215.9	91.9	6.4	8xø26	165.1	44.5
DN	**Class**	**H ~**	**d1**	**d2**	**f**	**g**	**k**	**x**
JIS10K 15A	150	63	95	51	1	4Xø15	70	12
JIS10K 20A		66	100	56	1	4Xø15	75	14
JIS10K 25A		66	125	67	1	4Xø19	90	14
JIS10K 40A		70	140	81	2	4Xø19	105	16
JIS10K 50A		70	155	96	2	4Xø19	120	16
JIS20K 15A	300	68	95	51	1	4Xø15	70	14
JIS20K 20A		72	100	56	1	4Xø15	75	16
JIS20K 25A		72	125	67	1	4Xø19	90	16
JIS20K 40A		78	140	81	2	4Xø19	105	18
JIS20K 50A		78	155	96	2	8Xø19	120	18
JIS40K 15A	600	81	115	55	1	4Xø19	80	20
JIS40K 20A		81	120	60	1	4Xø19	85	20
JIS40K 25A		88	130	70	1	4Xø19	95	22
JIS40K 40A		94	160	90	2	4Xø23	120	24
JIS40K 50A		100	165	105	2	8Xø19	130	26

» Other body and diaphragm materials: Hastelloy, Tantalum, Nickel, Titanium, Monel, Inconel etc., on demand.

"ALL STAINLESS" DIAPHRAGM SEAL PRESSURE GAUGES, TYPE PBS

TYPE	DRAWING	DIMENSIONS mm

16

17

18

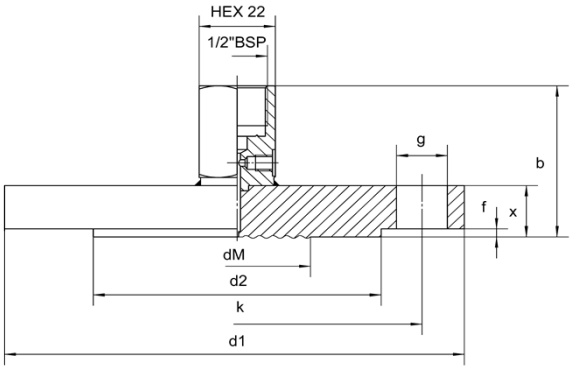

Flush Diaphragm

DN	PN bar	b	d1	d2	dM	f	g	k	x
DN 25	40	55,5	115	68	28	3	4xø14	85	18
DN 50	40	57.5	165	102	52	3	4xø18	125	20
DN 50	64	63.5	180	102	52	3	4xø22	135	26
DN 50	100	65.5	195	102	52	3.5	4xø26	145	28
DN 50	160	67.5	195	102	52	3	4xø26	145	30
DN 50	250	75.5	200	102	52	3	8xø26	150	38
DN 50	320	79.5	210	102	52	3	8xø26	160	42
DN 50	400	89.5	235	102	52	3	8xø30	180	52

DN	Class	b	d1	d2	dM	f	g	k	x
¾"ANSI	150	50.2	98.6	42.9	21	1.6	4xø16	69.9	12.7
¾"ANSI	300	53.3	117.3	42.9	21	1.6	4xø19	82.6	15.8
1" ANSI	150	51.7	108	50.8	28	1.6	4xø16	79.2	14.2
1"ANSI	300	55	123.9	50.8	28	1.6	4xø19	88.92	17.5
1½ ANSI	150	55	127	73.2	39.75	1.6	4xø16	98.6	17.5
1½ ANSI	300	58.1	155.4	73.2	39.75	1.6	4xø22	114.3	20.6
1½ ANSI	600	66.3	155.4	73.2	39.75	6.4	4xø22	114.3	28.8
2"ANSI	150	57.3	152.4	91.9	51.75	1.6	4xø19	120.7	19.8
2"ANSI	300	60	165.1	91.9	51.75	6.4	8xø19	127	22.5
2"ANSI	600	69.3	165.1	91.9	51.75	6.4	8xø19	127	31.8
2"ANSI	900	82	215.9	91.9	51.75	6.4	8xø26	165.1	44.5
3"ANSI	150	61.5	191	127	80	1.6	4xø20	152.4	24
3"ANSI	300	66	210	127	80	1,6	8xø23	168,1	28,5

DN	Class	b	d1	d2	dM	f	g	k	x
JIS10K 15A	150	49.5	95	51	21	1	4Xø15	70	12
JIS10K 20A		51.5	100	56	17	1	4Xø15	75	14
JIS10K 25A		51.5	125	67	28	1	4Xø19	90	14
JIS10K 40A		53.5	140	81	38	2	4Xø19	105	16
JIS10K 50A		53.5	155	96	46	2	4Xø19	120	16
JIS20K 15A	300	51.5	95	51	17	1	4Xø15	70	14
JIS20K 20A		53.5	100	56	17	1	4Xø15	75	16
JIS20K 25A		53.5	125	67	24	1	4Xø19	90	16
JIS20K 40A		55.5	140	81	38	2	4Xø19	105	18
JIS20K 50A		55.5	155	96	48	2	8Xø19	120	18
JIS40K 15A	600	57.5	115	55	17	1	4Xø19	80	20
JIS40K 20A		57.5	120	60	17	1	4Xø19	85	20
JIS40K 25A		59.5	130	70	24	1	4Xø19	95	22
JIS40K 40A		61.5	160	90	38	2	4Xø23	120	24
JIS40K 50A		63.5	165	105	48	2	8Xø19	130	26

» Other body and diaphragm materials: Hastelloy, Tantalum, Nickel, Titanium, Monel, Inconel etc., on demand.

"ALL-STAINLESS" DIAPHRAGM SEAL PRESSURE GAUGES, TYPE PBS

TYPE	DRAWING	DIMENSIONS mm

19 / 20

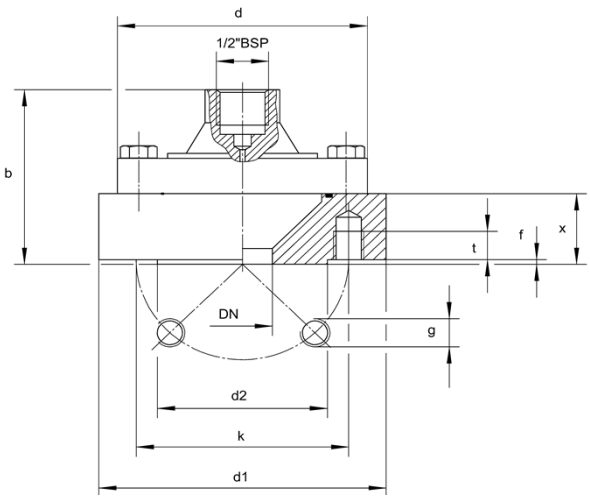

Open Flange

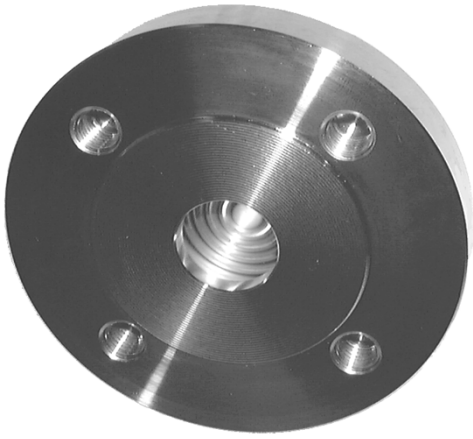

DN	PN bar	b	d	d1	d2	f	g	k	t	x
15	40	69	99	99	45	2	4x M12	65	12	25
20				105	58	2,5		75		
25		66		115	68	3		85		22

DN	Class	b	d	d1	d2	f	g	k	t	x
½"	150	74	99	99	34,9	1,6	1/2"UNF-20	60,3	15	30
½"	300							66,7		
½"	600					6,4		66,7		35
1"	150			108	50,8	1,6		79,4		30
1"	300			124			5/8"UNF-18	88,9		
1"	600					6,4		88,9		35
2"	150	66,4		152	92,1	1,6		121		19,1

21

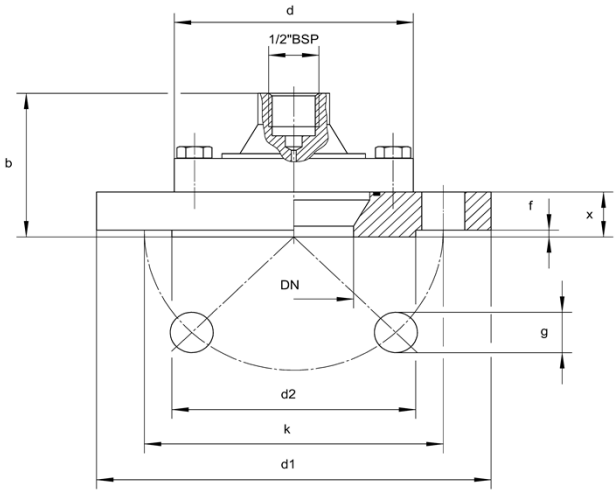

Open Flange

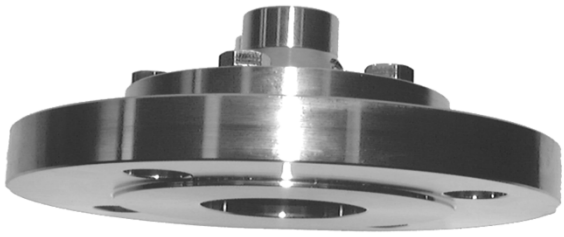

DN	PN bar	b	d	d1	d2	f	g	k	x
50	40	64	99	165	102	3	4x ø18	125	20

DN	Class	b	d	d1	d2	f	g	k	x
2"	300	66,4	99	165			8 x ø19	127	22,2
2"	600					6,4	8 x ø19	127	32

» Other body and diaphragm materials: Hastelloy, Tantalum, Nickel, Titanium, Monel, Inconel etc., on demand.

"ALL STAINLESS" DIAPHRAGM SEAL PRESSURE GAUGE, TYPE PBS

TYPE	DRAWING	DIMENSIONS mm

22 / 23

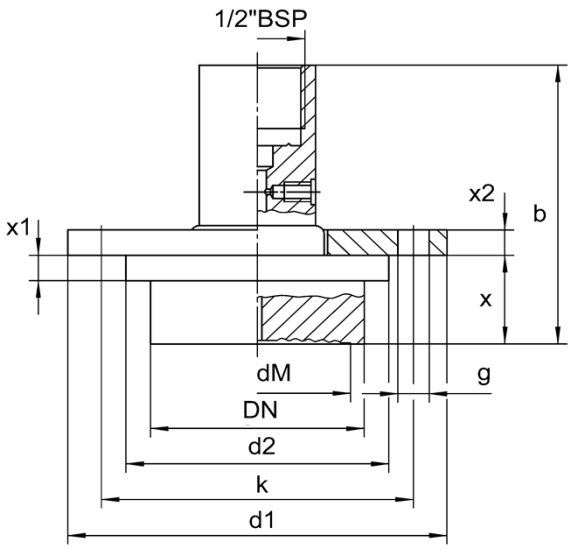

Paper Seal

DN	PN bar	Tube	b	d1	d2	dM	g	k	x	x1	x2
48	40	6,5	66	85	59	38	6xø7	70	21	6	6
		15	57,5						12,5		

24 / 25

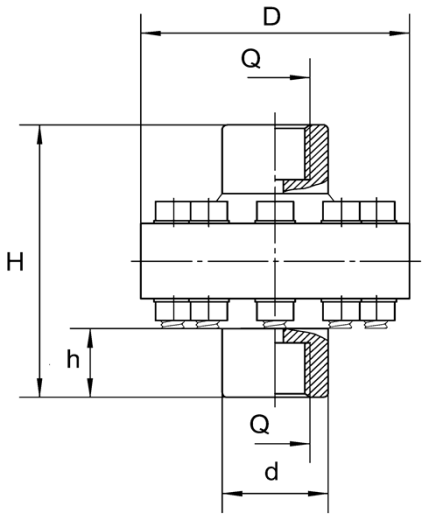

PVC Seal

Q	PN bar	d	D	h	H
1/4"BSP	10	25	81	18	87
1/2"BSP		32		22	

26

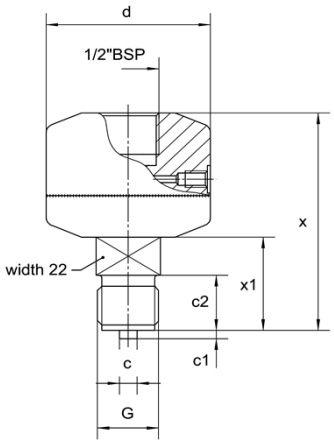

Mini Seal

DN	PN bar	c	c1	c2	d	x
½"BSP	160	6	3	20	57,5	74
½"NPT		–	–	19		73